ITEM	P/N	LEGACY_PART_ID	DESCRIPTION	QTY
1	108323	H16099J (2)	HEAD JNNS 0.099 MIN/ 0.105 SA414 GR G 16.00 OD 14.40 DR 2.77 2:1 ELL 1.059	2
2	143155	V10094-SL	SHELL BURNT 0.125 CS SA414-G 29.25 X 16.00 OD	1
3	163182	S112801A	HINGED CLOSURE ASY 6.625 OD 300# 0.438 THICK SA516-70 W/ VITON O-RING W/ MTR, U2 @ 400F (FULL VAC) W/ SA105 LIFT LUG	1
3.4	115807	LL2898	LUG 0.406 SA105 X 2.00 4850# MAX LIFT	1
3.1	108716	S112801	HINGED CLOSURE 6.625 OD 300# 0.438 THICK SA516-70 W/ VITON O-RING W/ MTR, U2 @ 400F (FULL VAC)	1
4	120539	F102001	WELD FLG 2.000 NPT SA181 CL 70 RAD 958	2
5	113231	F100500	WELD FLG 0.500 NPT SA181 CL 70 FLAT 253	4
6	139373	S101652	BAFFLE 0.179 A1011 CS TYPE B X 4.5 X 7.5	1
7	115807	LL2898	LUG 0.406 SA105 X 2.00 4850# MAX LIFT	2
8	163177	S112769	SKIRT ASY 10GA A1011CS-B 12.00 OD W/4.000 CLR FOR 16.00 OD TANK	1
8.1	163178	S112769-1	SKIRT 10GA A1011CS-B 5.375 X 12.00 OD FOR 16.00 OD TANK	1
8.2	120096	S101519-P	SKIRT CLIP 0.135 A1011 GR B 2.00 X 2.00 X 2.88	4
9	165971	V10094-NP	NAME PLATE FOR V10094 A1011CS-B	1

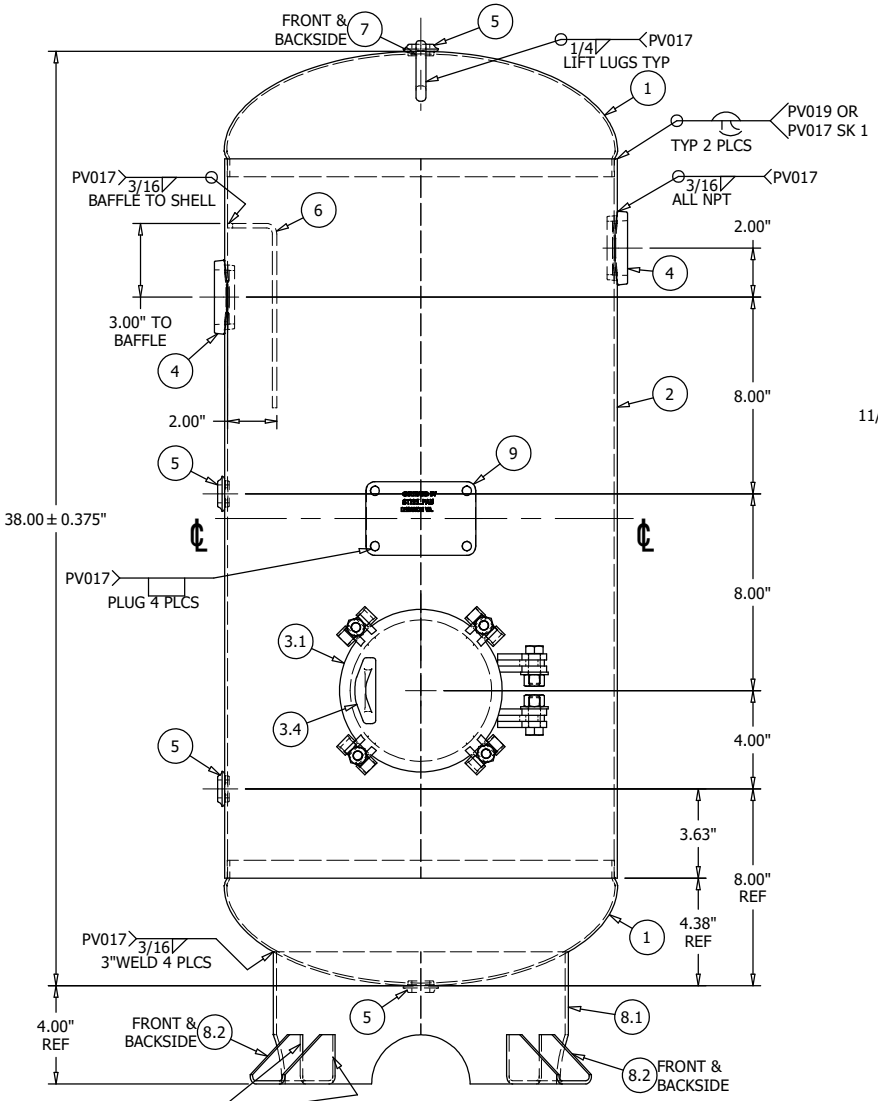

FRONT VIEW
TRUE ELEVATION

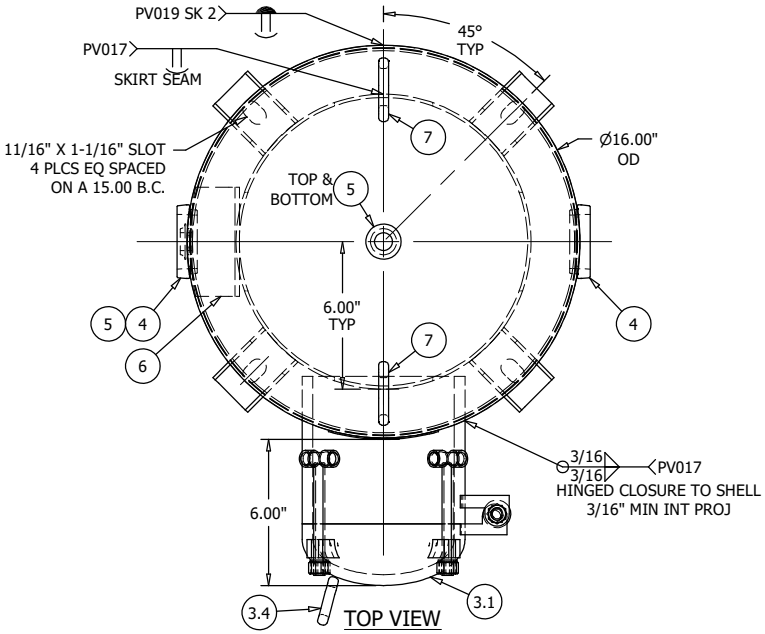

TOP VIEW
TRUE ORIENTATION

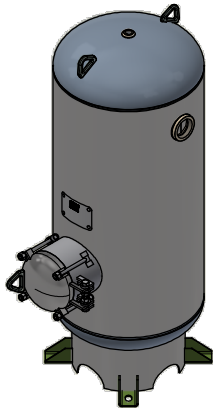

**SHELL CUT SIZE IS REFERENCE ONLY
**CPLG & FITTING 0.50 EXT PROJ TYP
**HEAD THICKNESS SHOWN IS SPECIFIED MINIMUM
**RADIUS INSIDE PROJECTED EDGES OF NOZZLES 1/8" MIN
**SEE PAGE 2 FOR FINISH
**ALL DIMS IN INCHES UNLESS NOTED OTHERWISE
**IMPACT TEST EXEMPT PER UG 20(f)

16" X 38" 150/FV# VERTICAL-VACUUM TANK

NOTES

TRAVELER REQUIRED Yes FIXTURE REQUIRED No IF YES THEN FIXTURE #

REV	DATE	DESCRIPTION	ENG	AI/DATE
1	8/24/22	CREATED ASY FOR HINGED CLOSURE TO INCLUDE LIFT LUG	MG	

RELEASED TO PRODUCTION
SALES ORDER#
RELEASE DATE:
NB/SERIAL#

TOLERANCES ARE PER EN1370
SPVG STANDARD TOLERANCES
UNLESS OTHERWISE SPECIFIED
QTY:

HEAD THK: .099" MIN C.A.: --- MAT'L SA414-G EFF 85 %
SHELL THK: .125" NOM C.A.: --- MAT'L SA414-G EFF 70 %

NAT'L BD: Yes STAMP " U "
VOLUME: 30 APPROX GAL
SHIPPING WEIGHT: 109 LBS
CRN: NONE

MAWP 150/FV PSI AT 400 °F
MDMT -20 °F AT 150/FV PSI
TEST: HYDRO AT 195 PSI
TEST: PNEU AT 195 PSI

DESIGN & CALCULATIONS COMPLY WITH
ASME CODE SECTION VIII, DIV1.
LATEST EDITION

SPVG STOCK

ENG. APP'L / DATE
BW - 1/15/2020
PE-1/16/2020
A.I. VERIFICATION / DATE
BQ-1/16/2020

SAMUEL PRESSURE VESSEL GROUP
OAKVILLE, ONT LEBANON, VA

DRAWN BY: IDV/SA
DATE: 1/8/2020
P/N V10094
LEGACY PART NO N/A
PAGE 1 OF 2
REV. 1

SF-FRM-EN1450 REV 1 08/05/2020