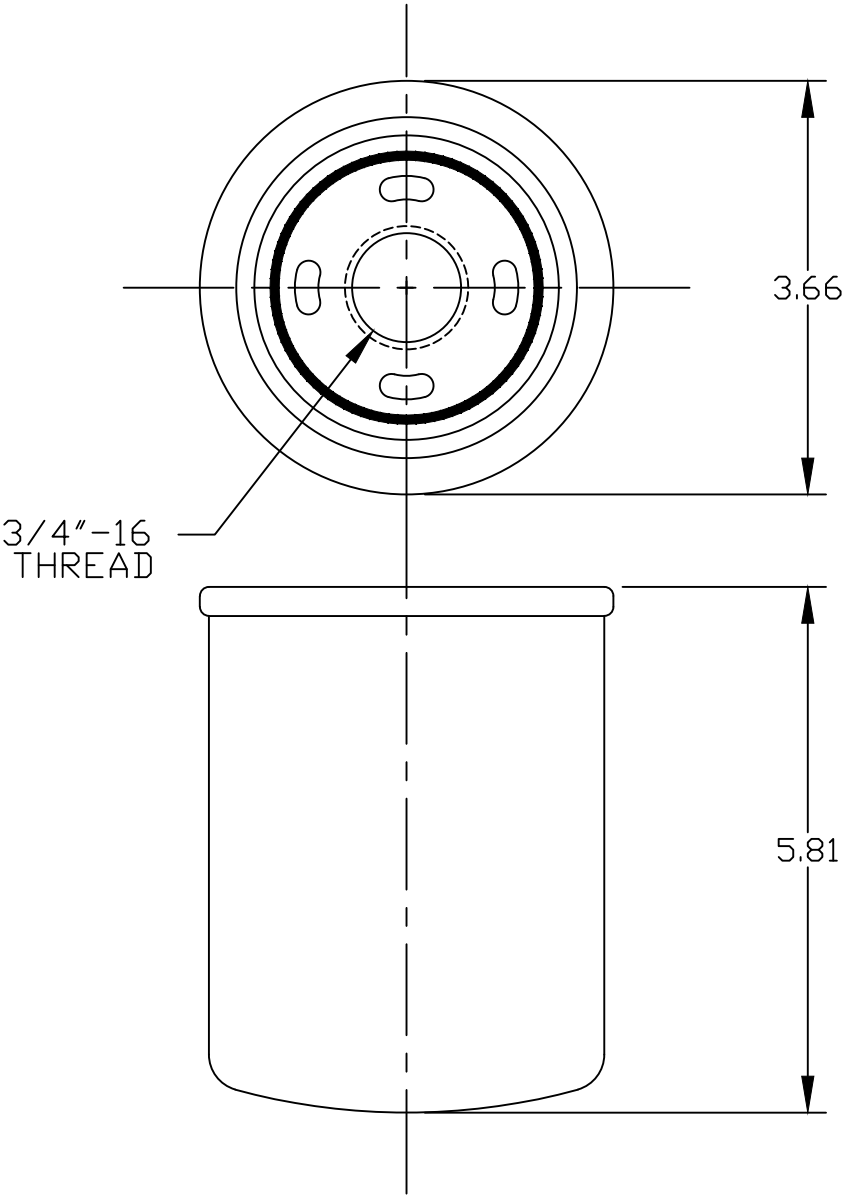

PRECISION RANGE: 20-25 UM

KELTEC Technolab

2300 East Enterprise Parkway
Twinsburg, Ohio 44087

Part No. KL325-036

Rev. 0.0

THIS DOCUMENT AND ITS CONTENT ARE THE PROPERTY OF KELTEC TECHNOLAB. THE USE OF THIS DOCUMENT AND ITS CONTENTS WITHOUT WRITTEN PERMISSION OF KELTEC TECHNOLAB IS PROHIBITED

OEM: ---

OEM No. ---

WEIGHT LBS.

DRAWN BY: C. SMITH

DATE: 10/5/2016

Part No.
KL325-036