Model name	Rev.Ver.
LZL05-BF363-A	0.2
Drawing name	**Rev.Ver.**
LZL05-BF363-A	0.3

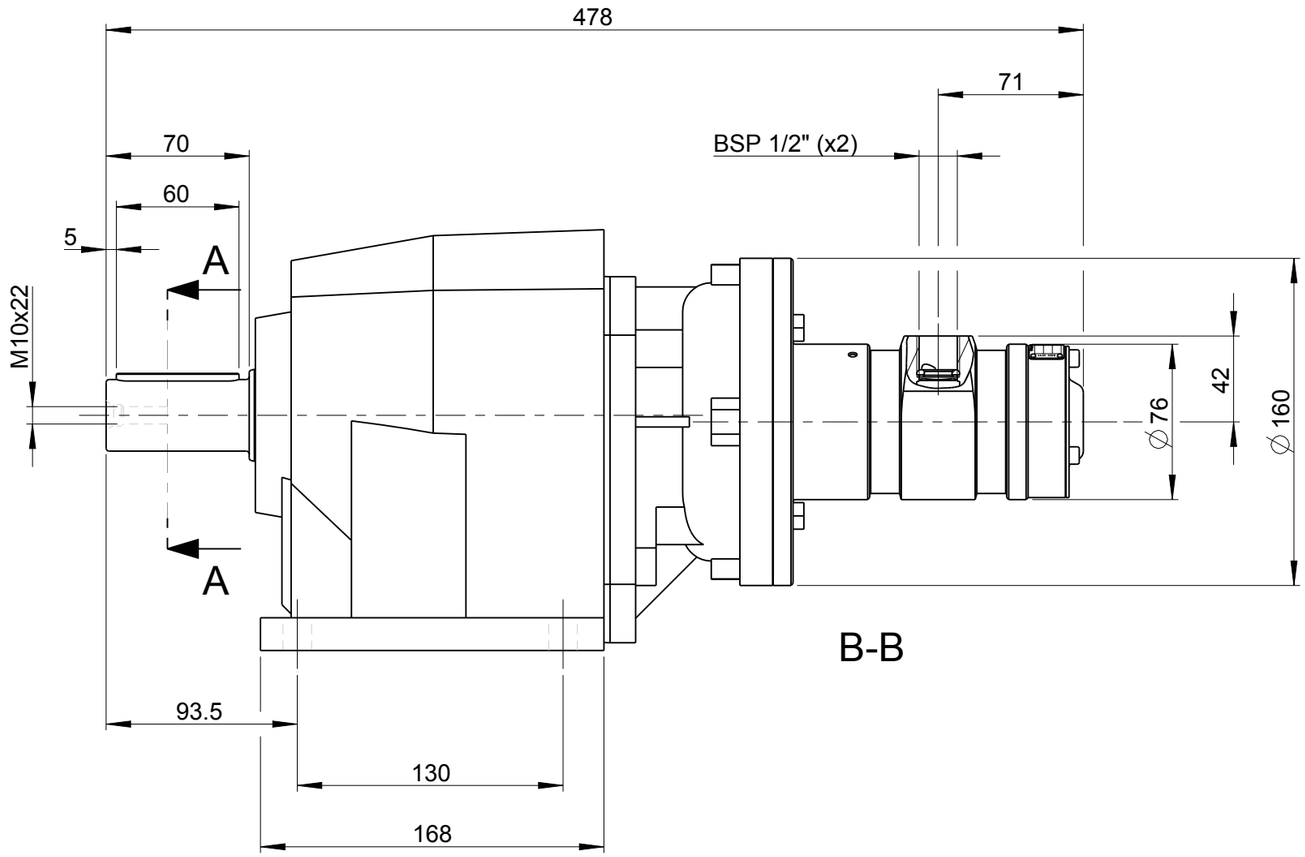

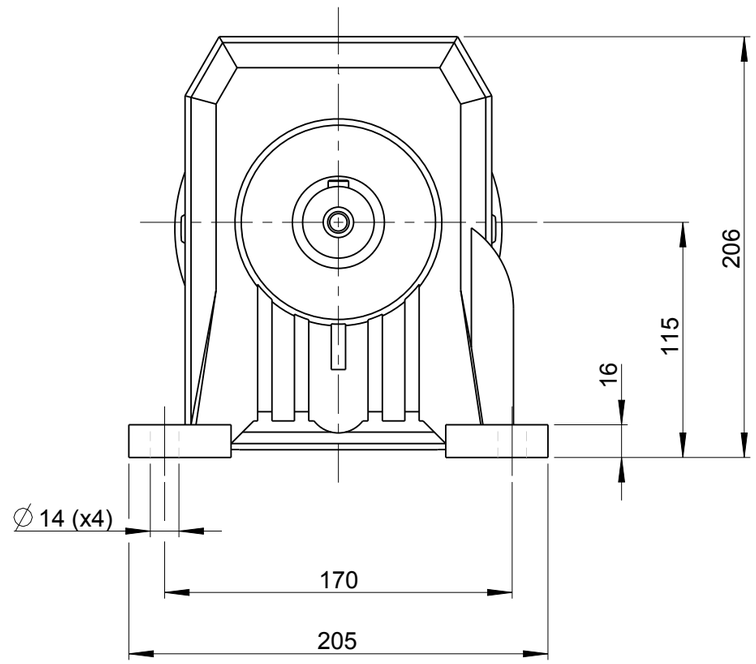

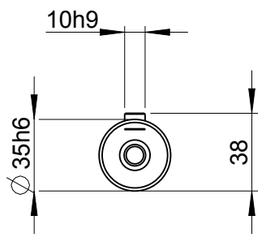

A-A

MOTOR NAME	ORDERING NO.
LZL05-BF363-A-102	8411 1810 23
LZL05-BF363-A-140	8411 1810 49

Note	Pos.	Modified from	Date	Intr.
0	-	-	-	-

Tolerances, if not indicated, according to: AC-STD	-	-	-	-	-
	-	-	-	-	-

Name: LZL05-BF363-A
Material: -
Secrecy class: 1102 K/-
CAD: Pro/E

Atlas Copco

Scale	Format	Family	Compare	Drawing owner
1:3	A3	-	-	TOO
Drawn: F GRINELL		Blank: -	Replaces: -	
Cons.class: 1295 K/-	Rev: 0	Status: In Work	Designation: LZL05-BF363-A	Sheet 1 (1)
Mass/Volume: -		Date: 2013-05-28		

Transferred from: -

This document is our property and shall not without our permission be altered, copied, used for manufacturing or communicated to any other person or company.