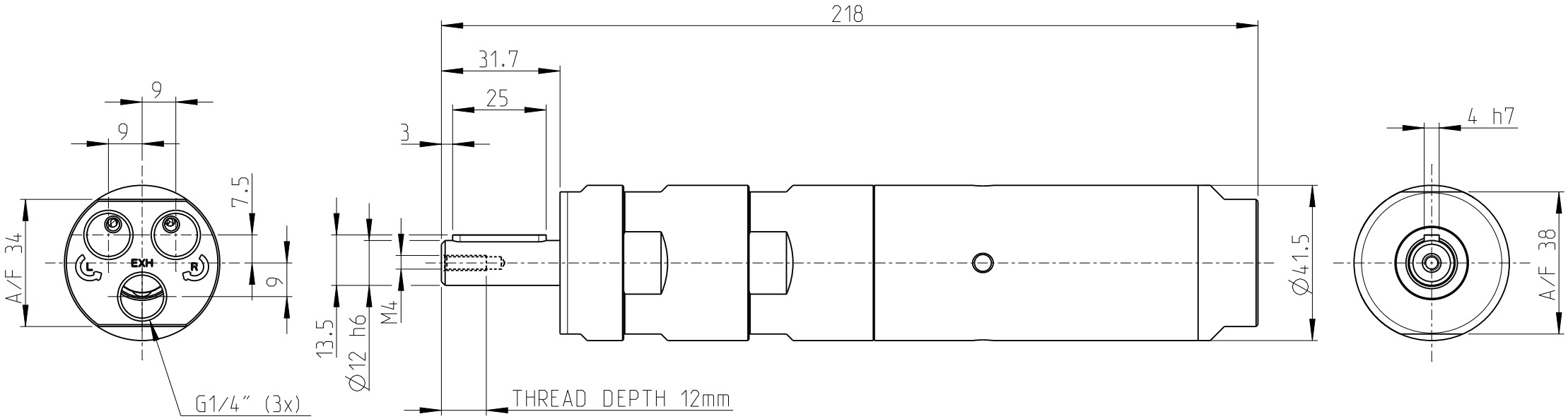

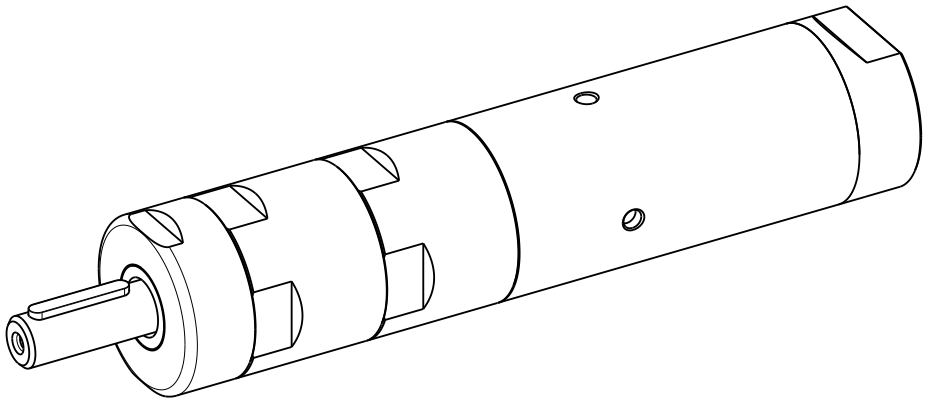

Atlas Copco

Date	Scale	Ordering No.	Model
2024-11-07	0.700	8411 0308 62	LZB33-L-LR200-11