Model name	LZL15-BF322-B	Rev.Ver. 0.1
Drawing name	LZL15-BF322-B	Rev.Ver. 0.1

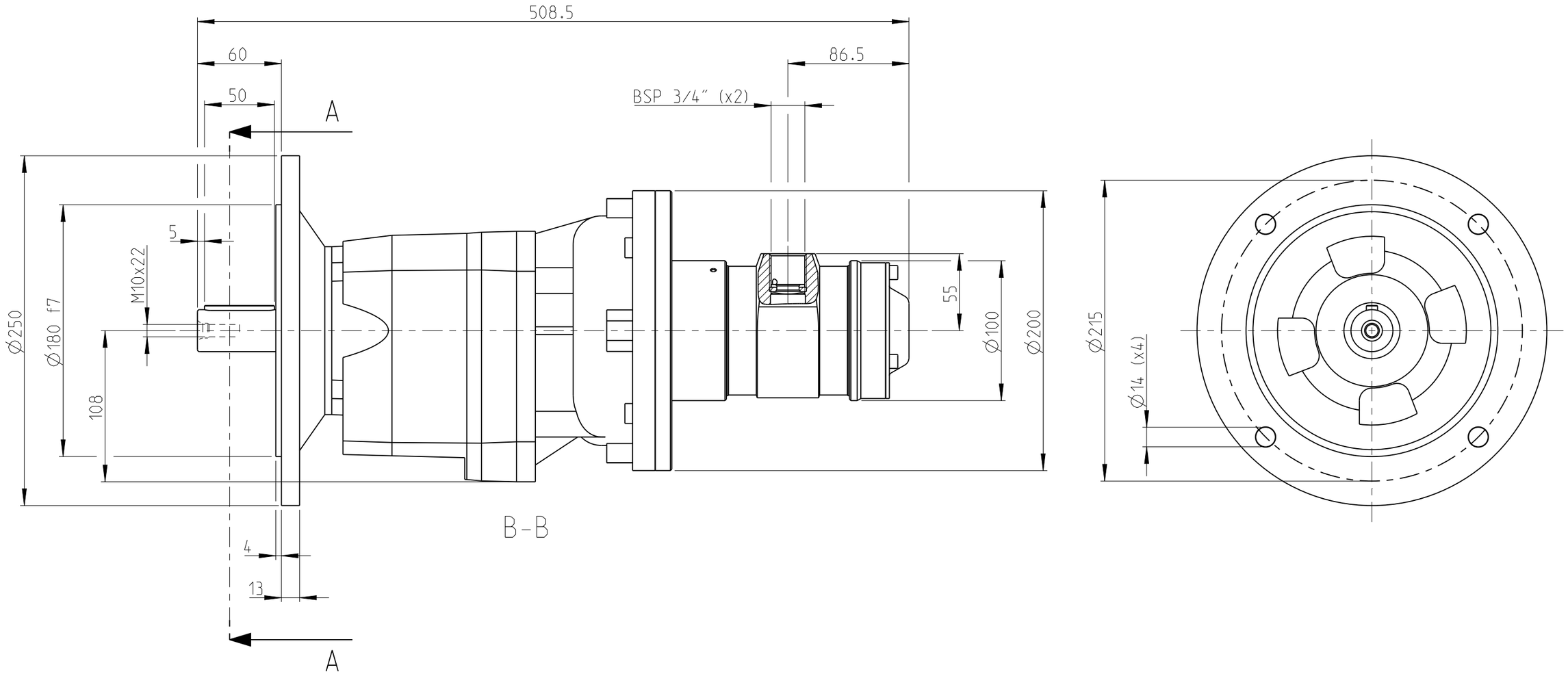

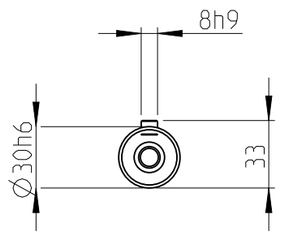

MOTOR NAME	ORDERING NO.
LZL15-BF322-B-011	8411 1810 79
LZL15-BF322-B-018	8411 1810 95
LZL15-BF322-B-033	8411 1811 11
LZL15-BF322-B-060	8411 1811 37

Note	Pos.	Modified from	Date	Intr.
0	-	-	-	-

Tolerances, if not indicated, according to: AC-STD	-	-	-	-	-
	-	-	-	-	-

Name LZL15-BF322-B				Secrecy class 1102 K/-
Material -				CAD Pro/E
-				
Scale 1:3	Format A3	Family -	Compare -	Drawing owner TOO
Drawn F GRINELL		Blank -	Replaces -	
Cons.class 1295 K/-	Rev 0	Status In Work	Designation LZL15-BF322-B	Sheet 1 (1)
Transferred from -	Mass/Volume -	Date 2013-05-29		

Atlas Copco

This document is our property and shall not without our permission be altered, copied, used for manufacturing or communicated to any other person or company.