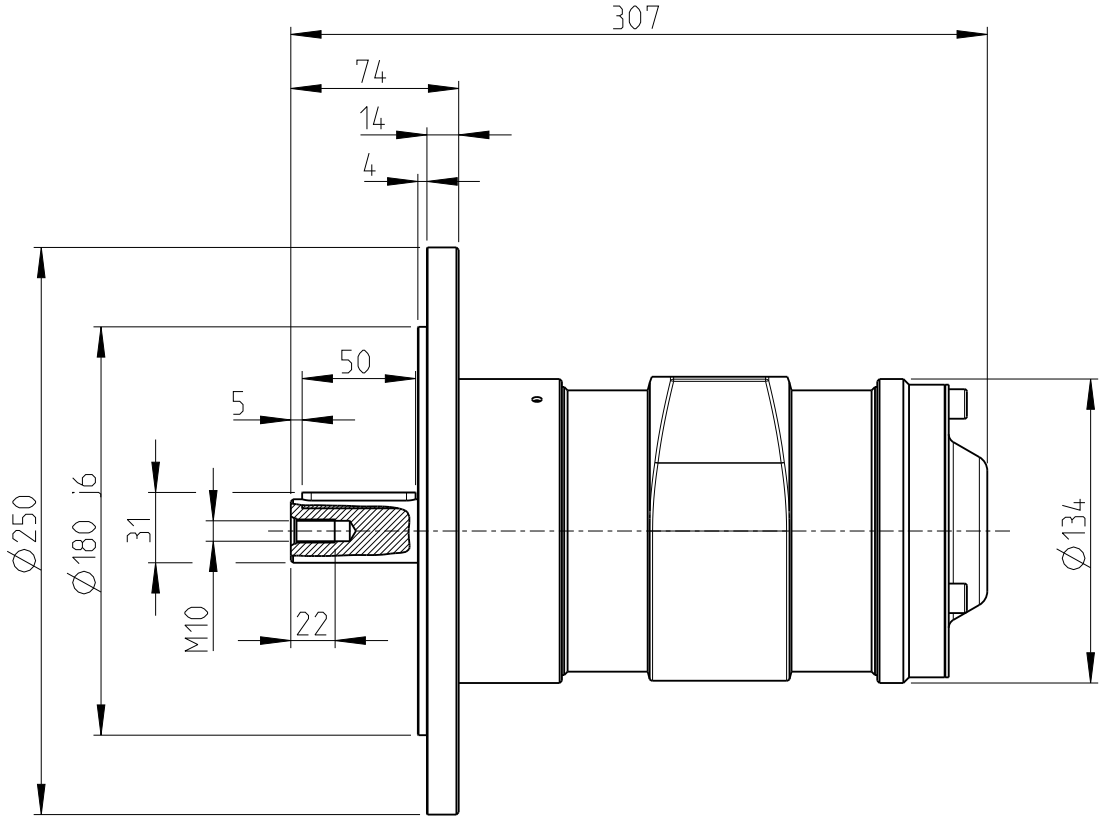

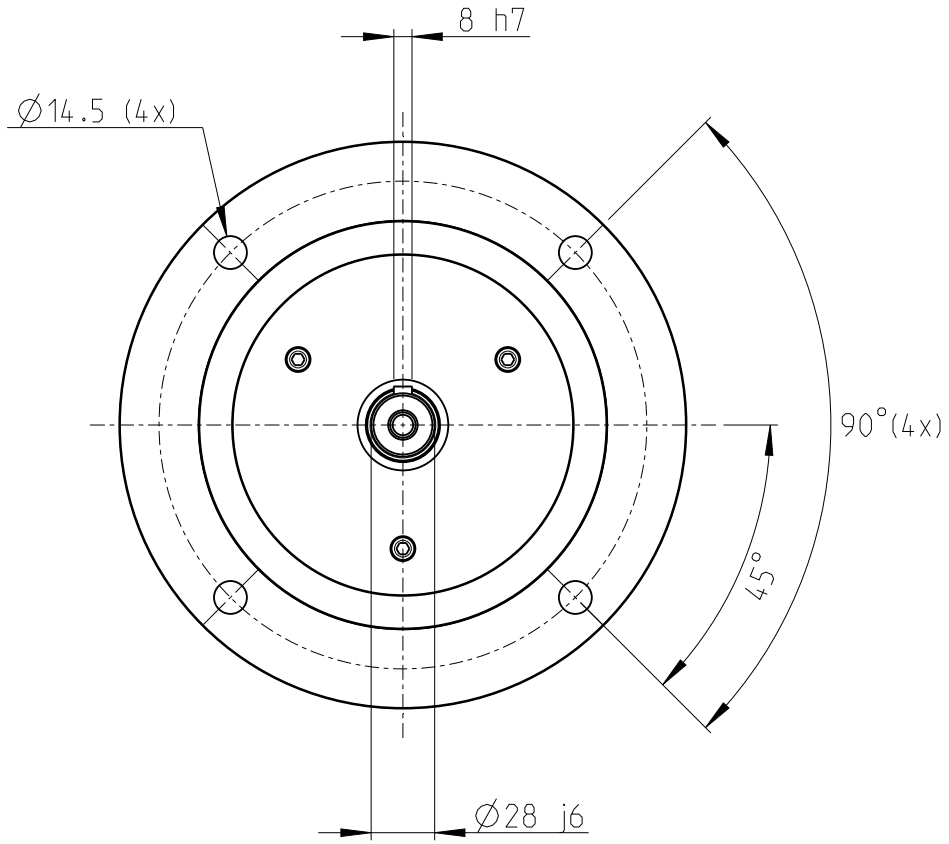

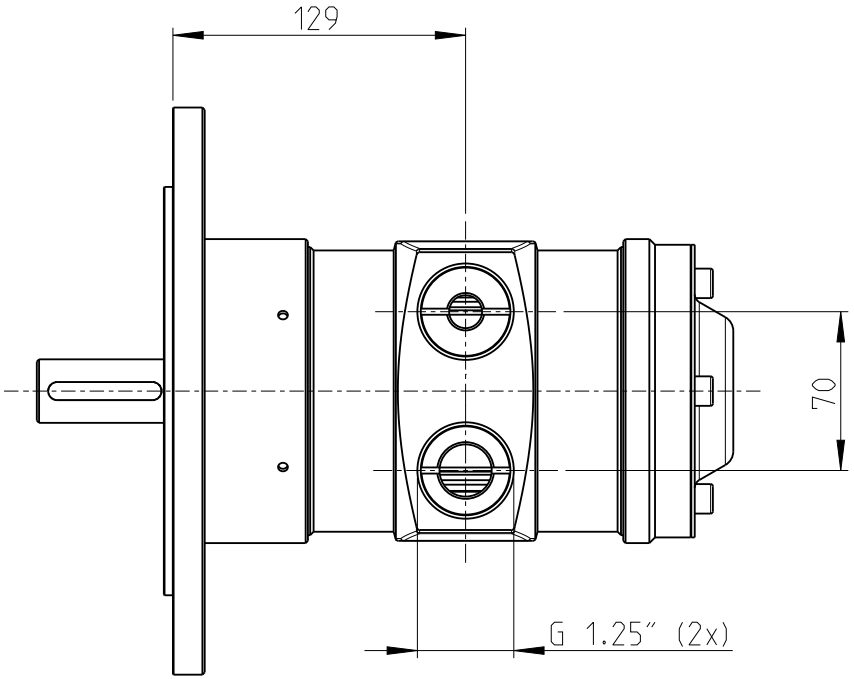

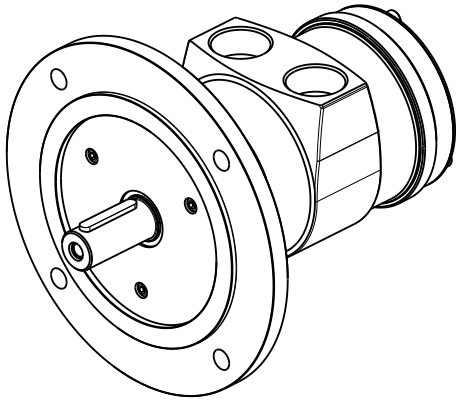

Atlas Copco

Date	Scale	Ordering No.	Model
2024-06-26	0.300	8411 1011 84	VANE MOTOR LZL35-L-P-IEC