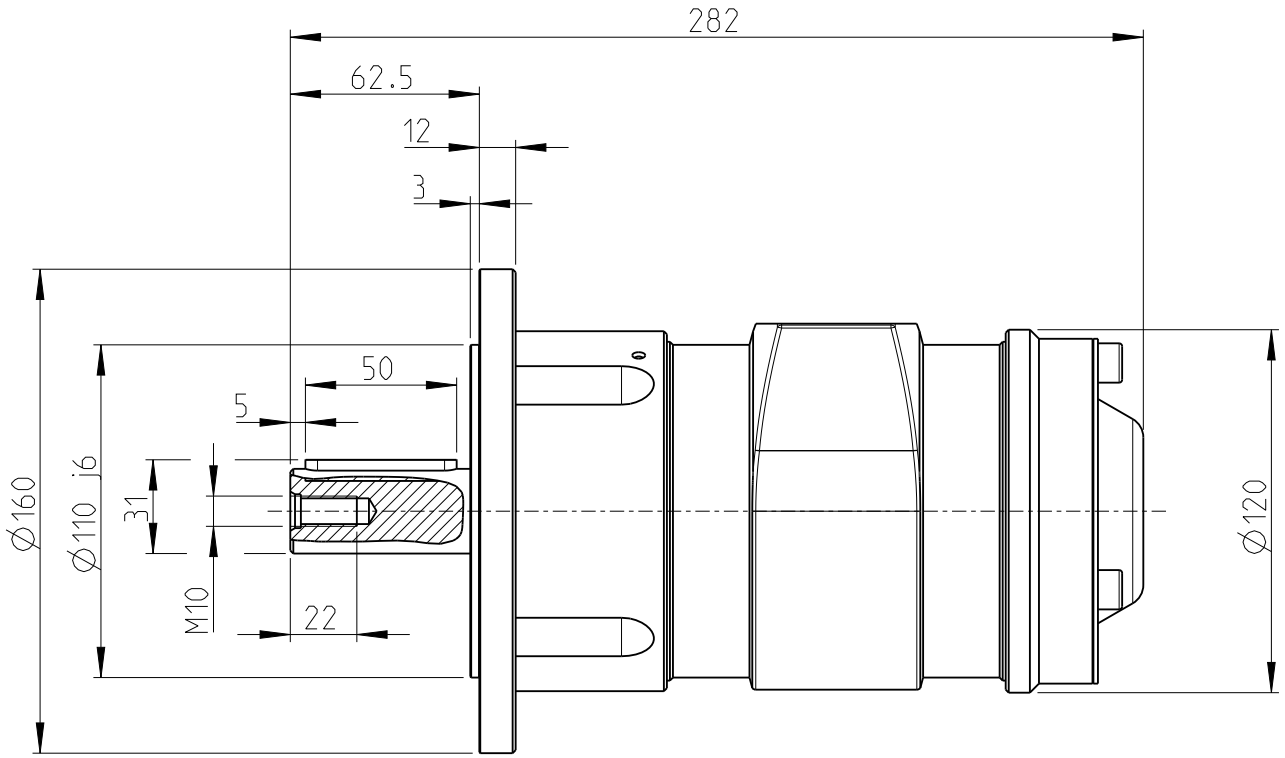

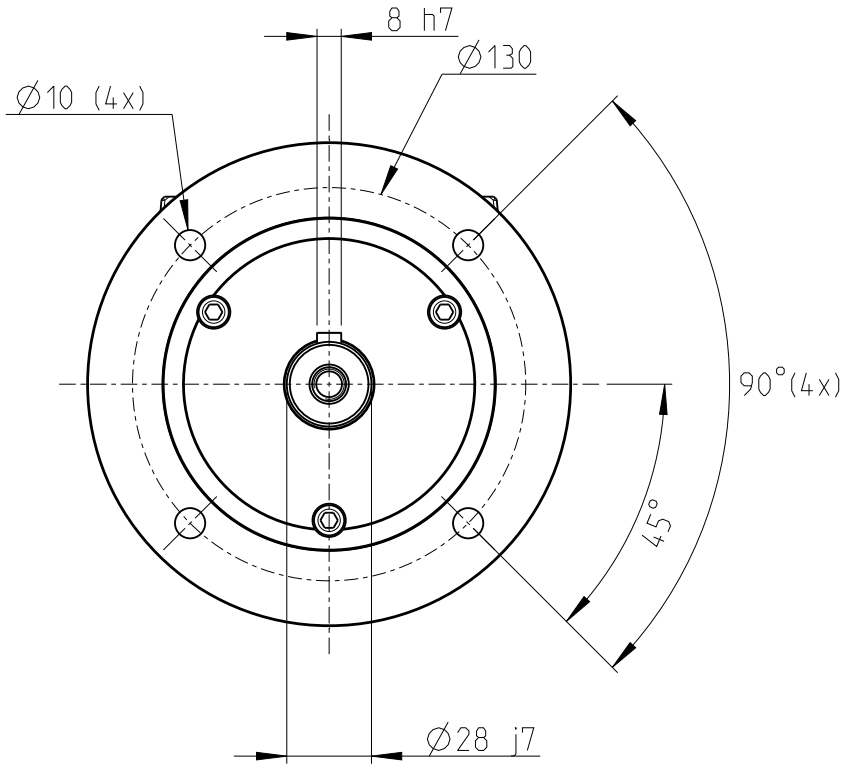

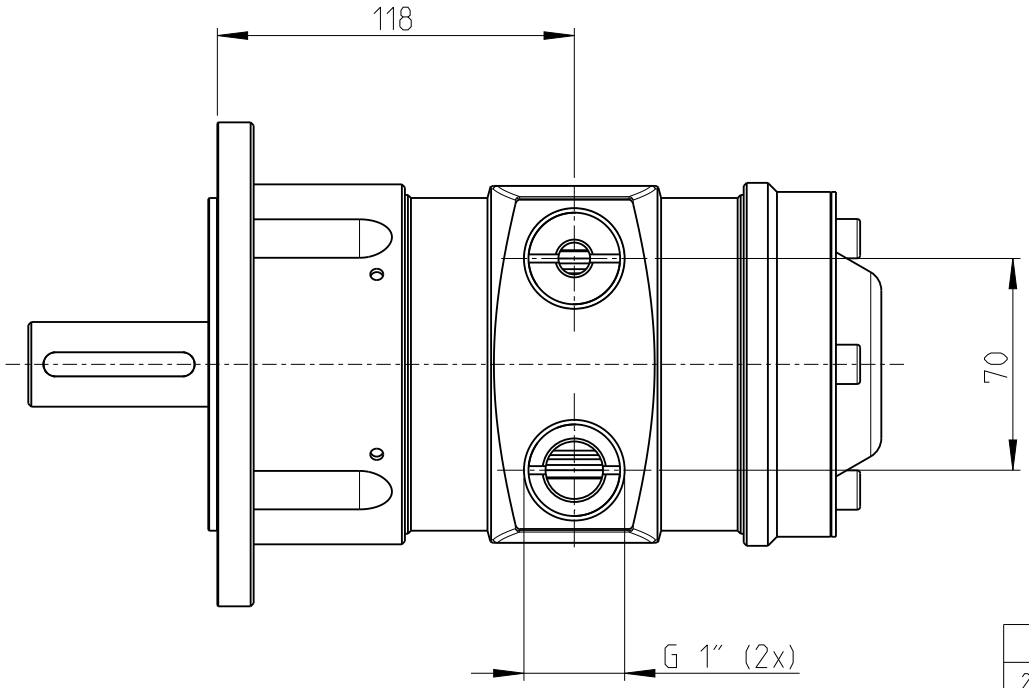

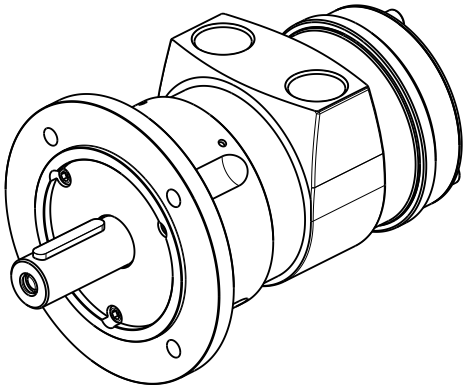

Atlas Copco

Date	Scale	Ordering No.	Model
2024-06-26	0.400	8411 1011 27	VANE MOTOR LZL25-L-P-AC