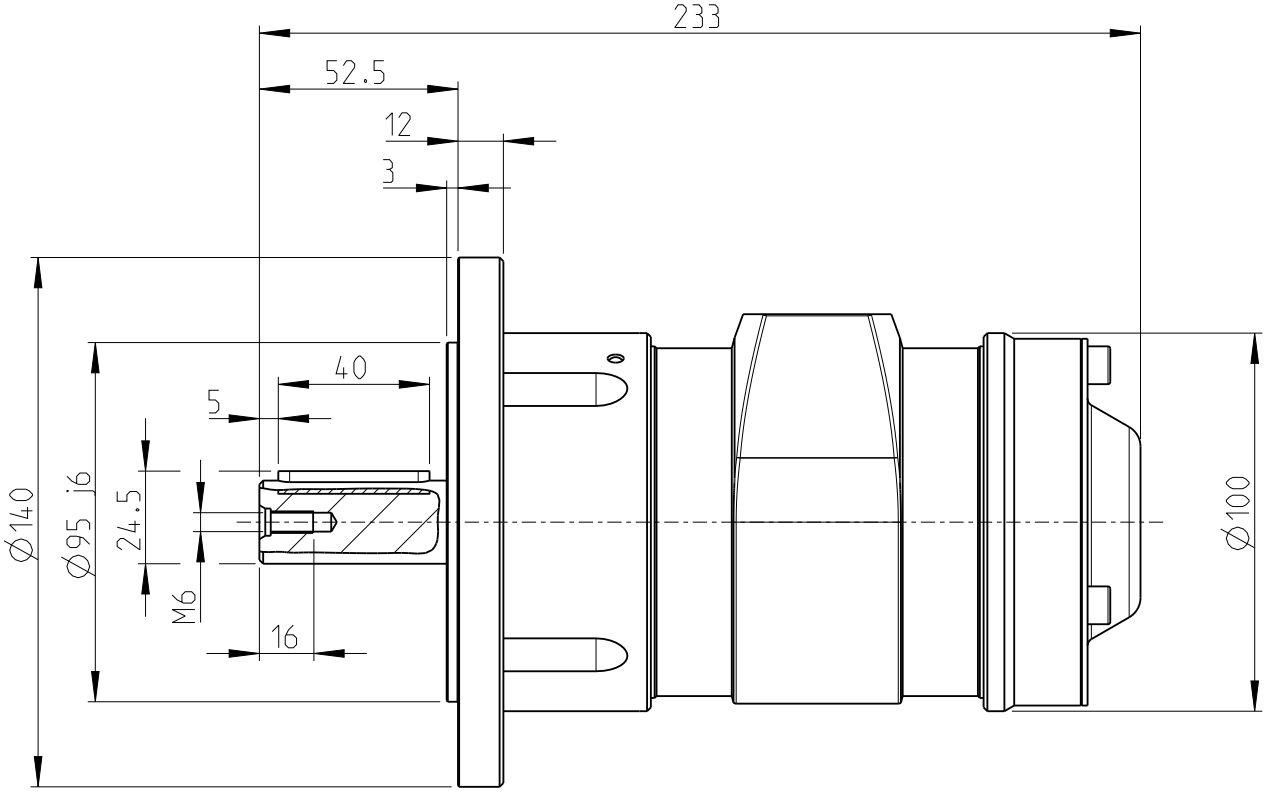

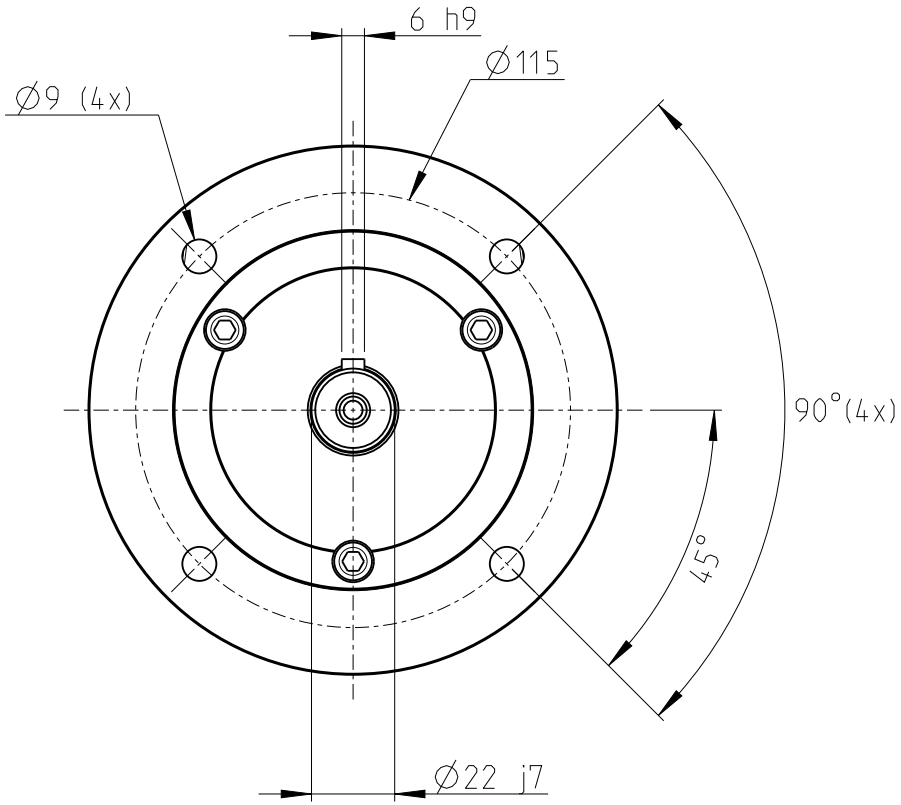

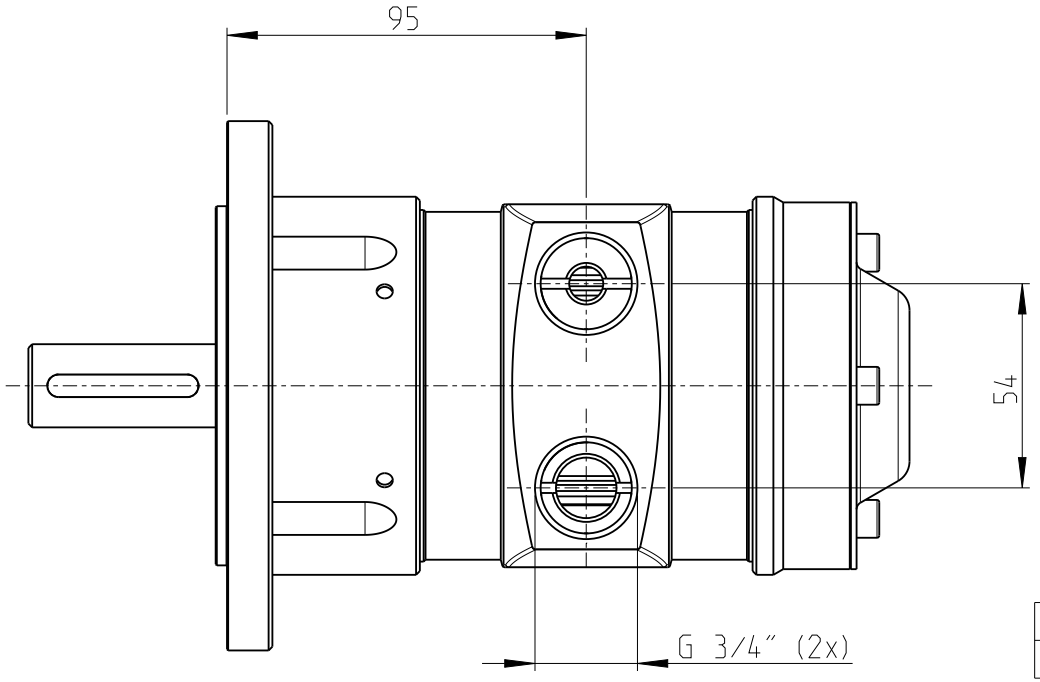

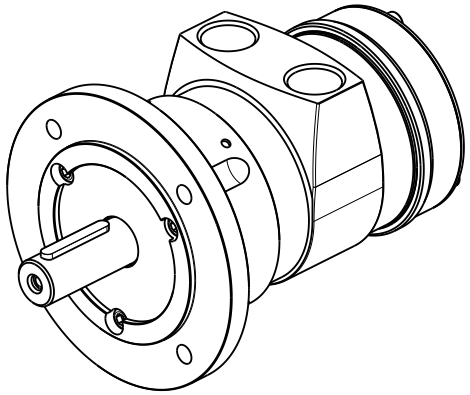

Atlas Copco

Date	Scale	Ordering No.	Model
2024-06-26	0.500	8411 1011 19	VANE MOTOR LZL15-L-P-AC