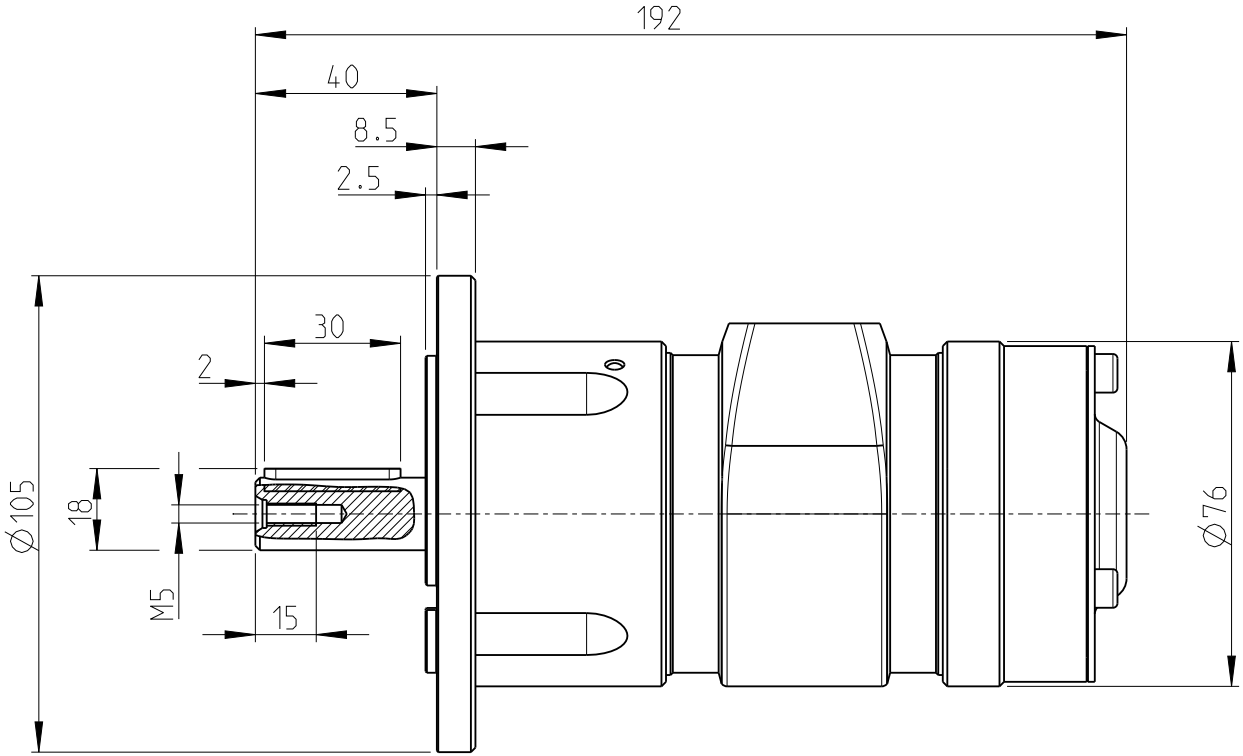

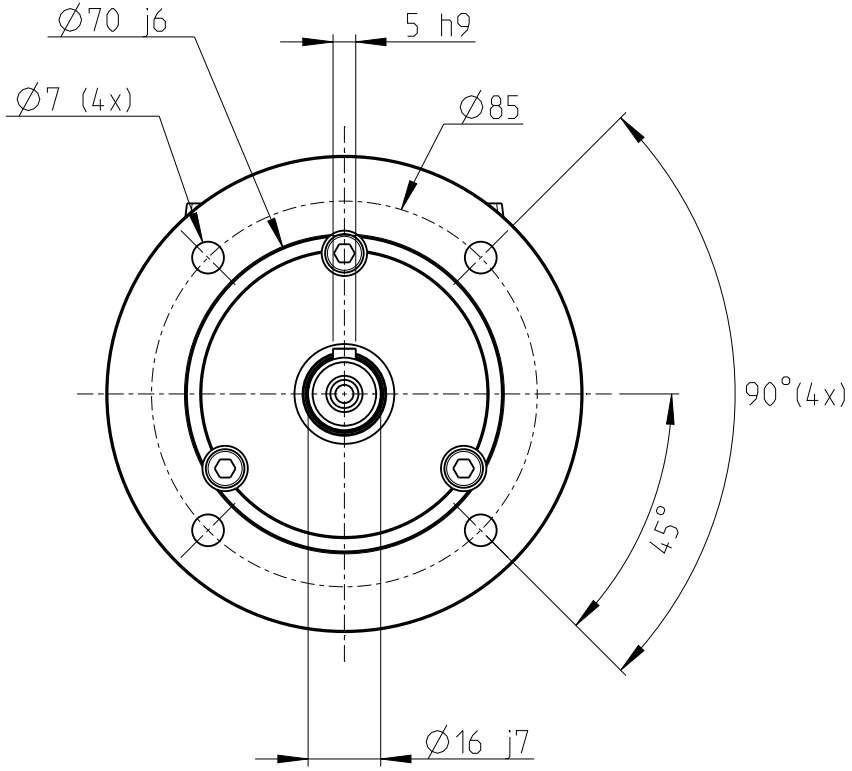

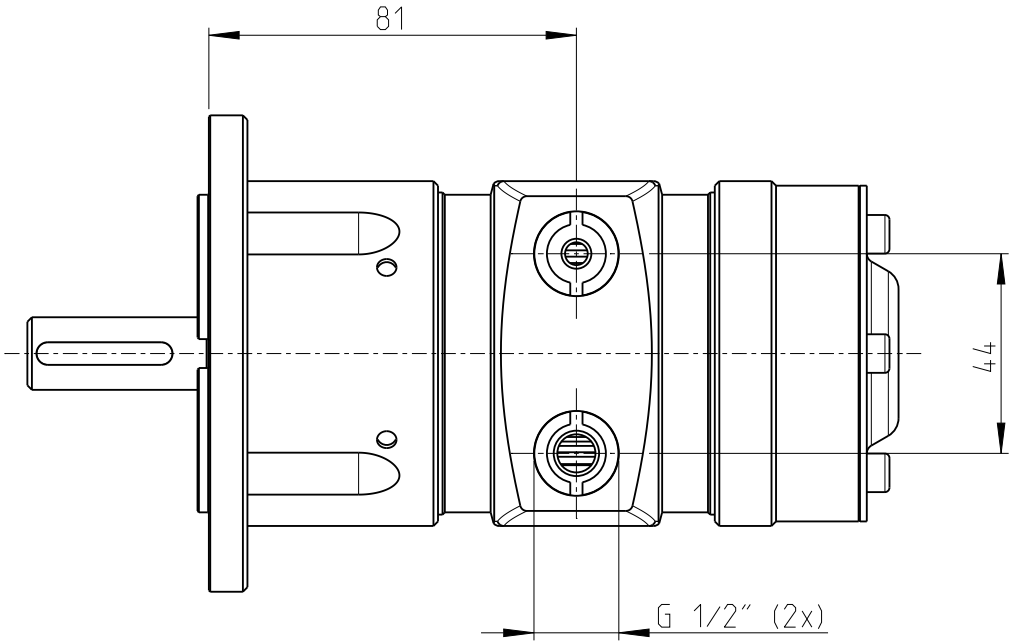

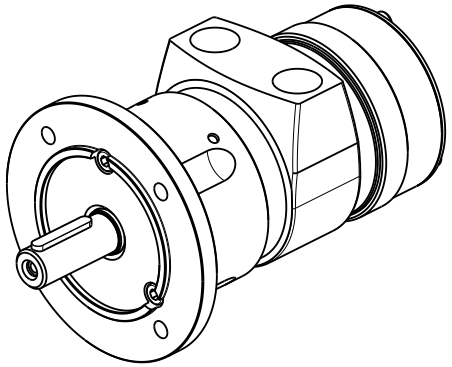

Atlas Copco

Date	Scale	Ordering No.	Model
2024-06-25	0.600	8411 1010 63	LZL05-L-M-AC