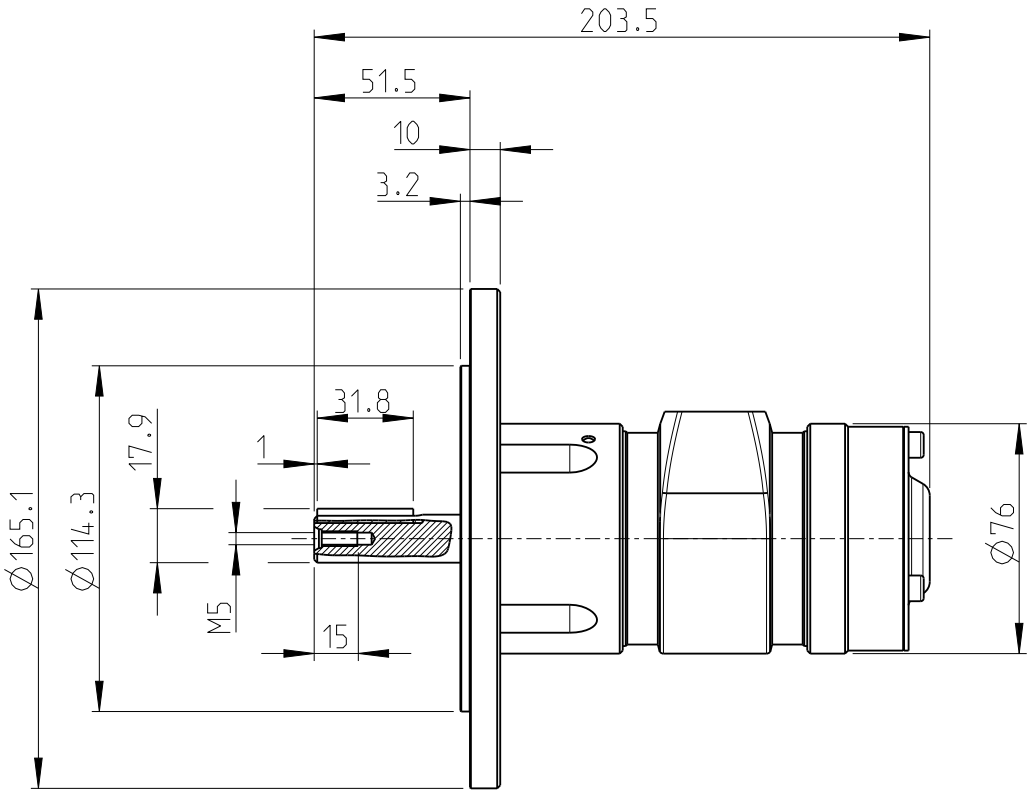

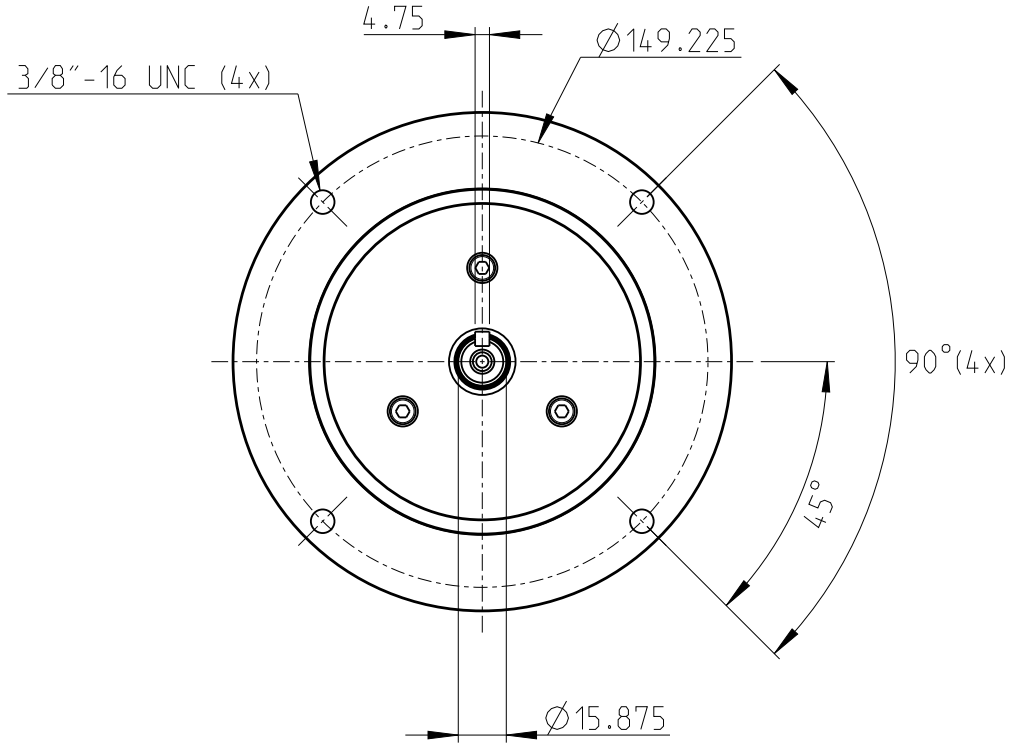

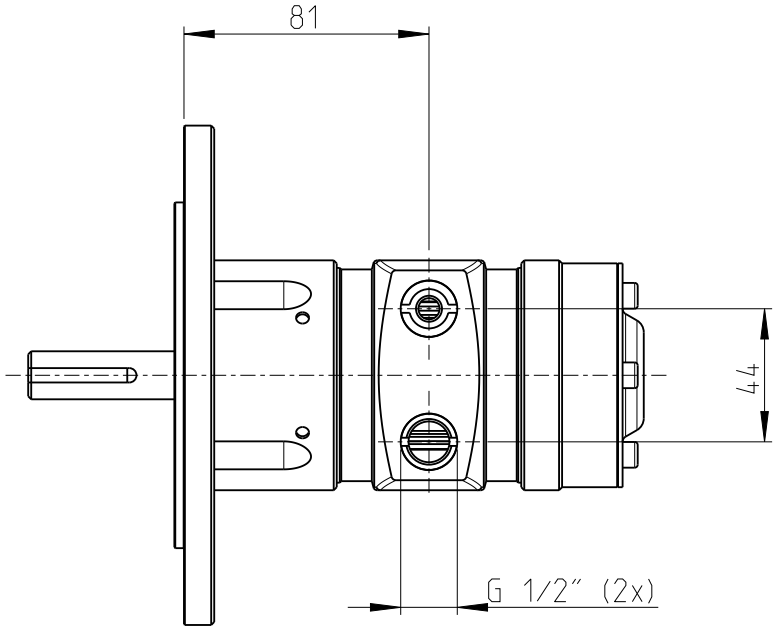

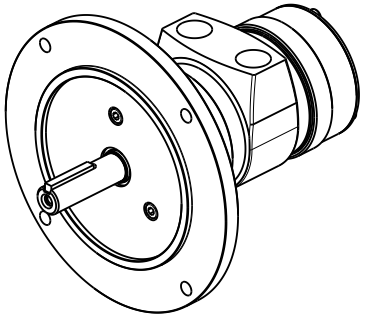

Atlas Copco

Date	Scale	Ordering No.	Model
2024-06-25	0.400	8411 1010 55	VANE MOTOR LZL05-L-P-NEMA