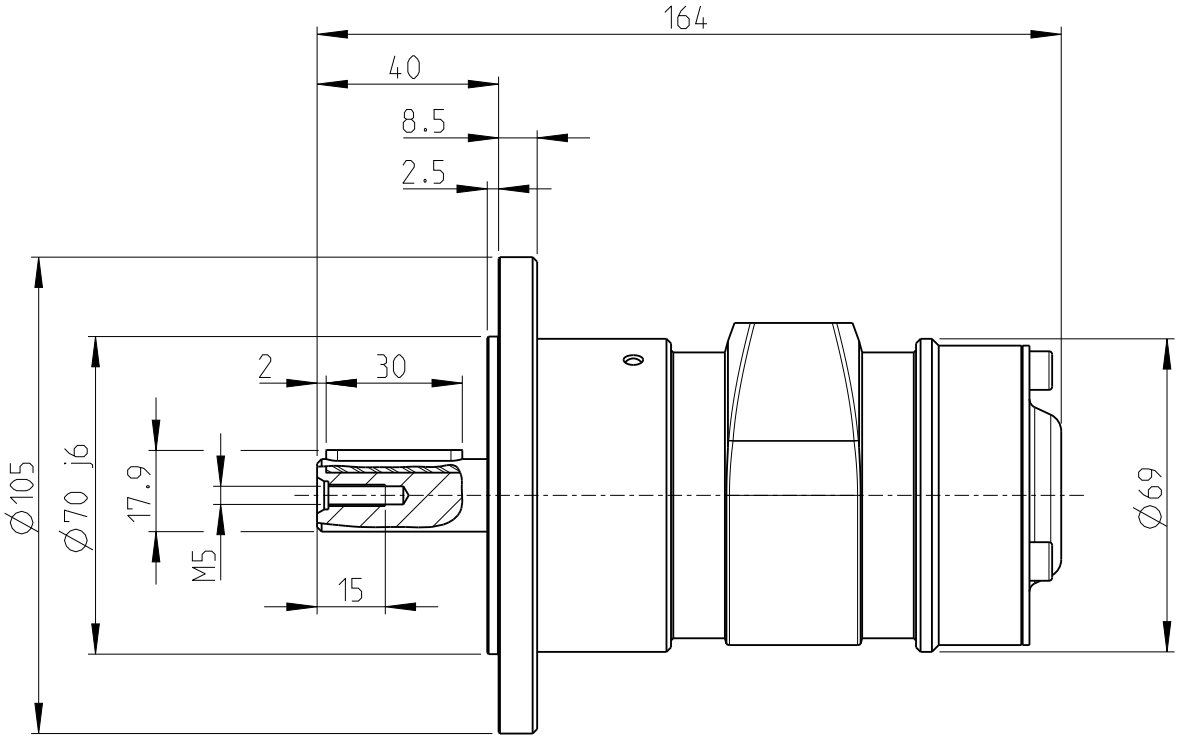

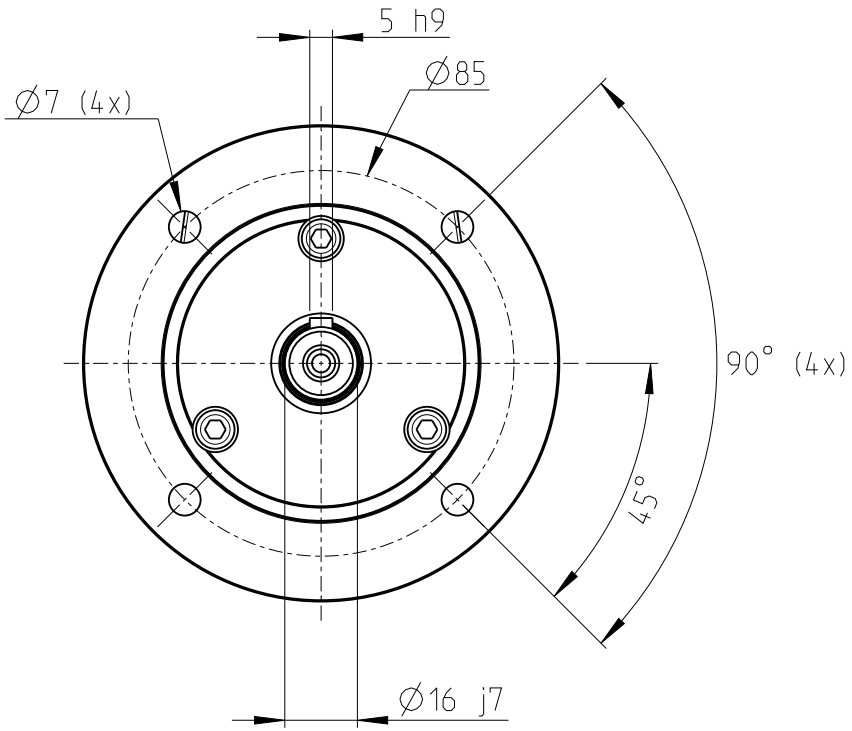

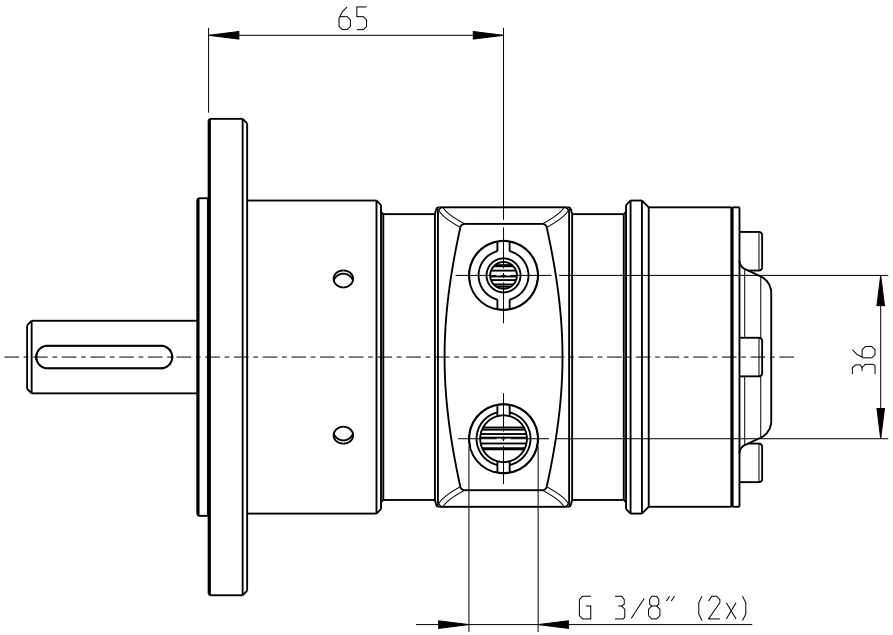

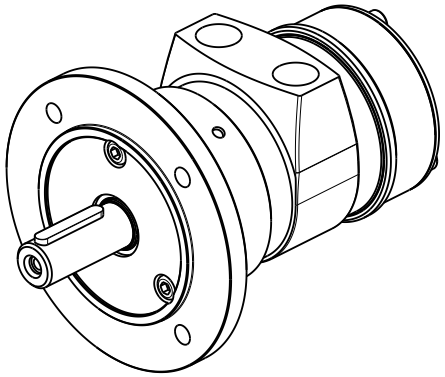

Atlas Copco

Date	Scale	Ordering No.	Model
2024-06-25	0.600	8411 1009 70	VANE MOTOR LZL03-L-P-AC