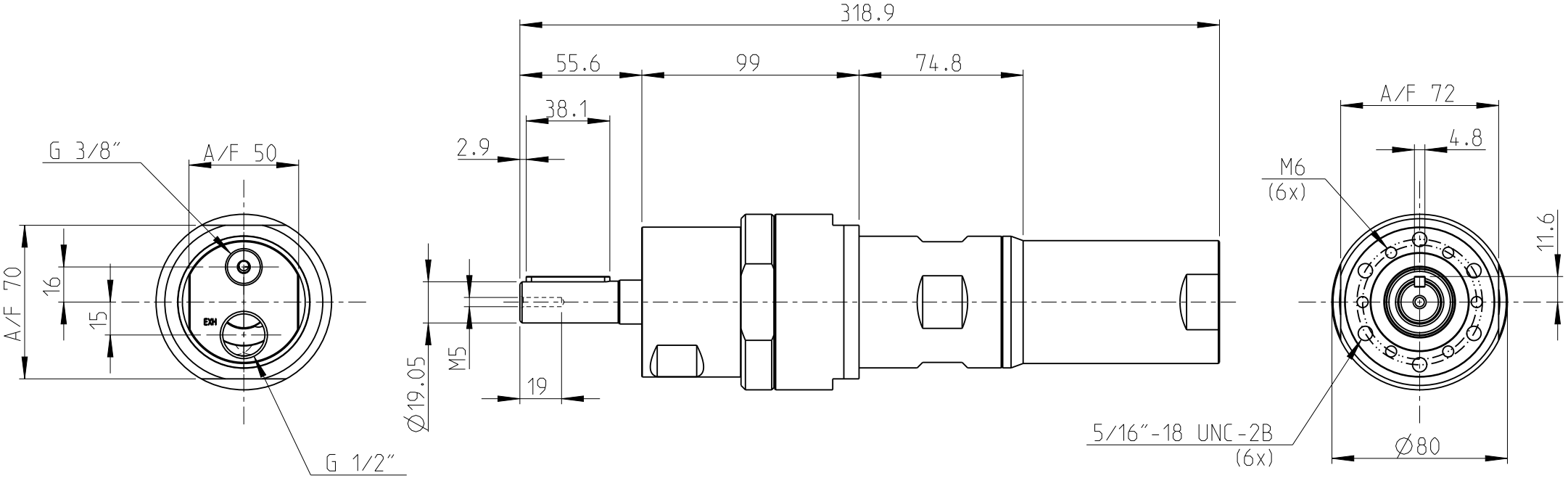

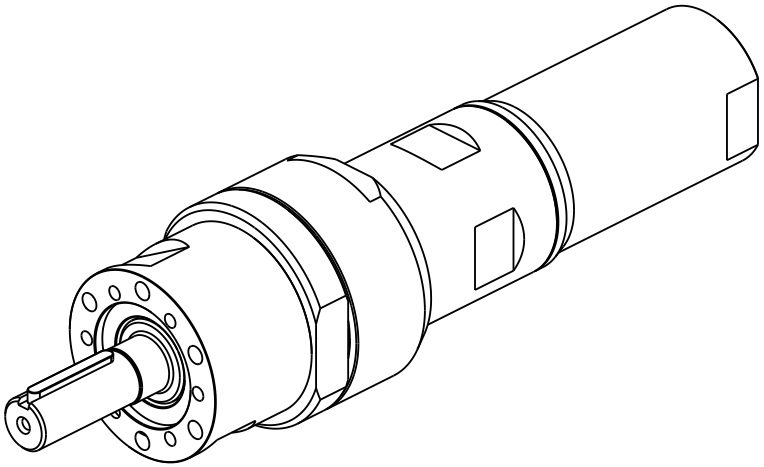

Atlas Copco

Date	Scale	Ordering No.	Model
2024-01-19	0.400	8411 0571 67	LZB54-L-A0017-15