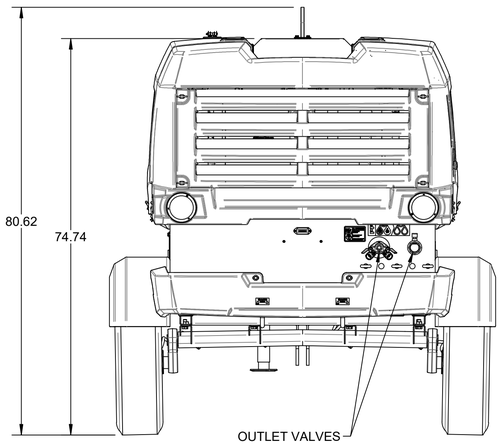

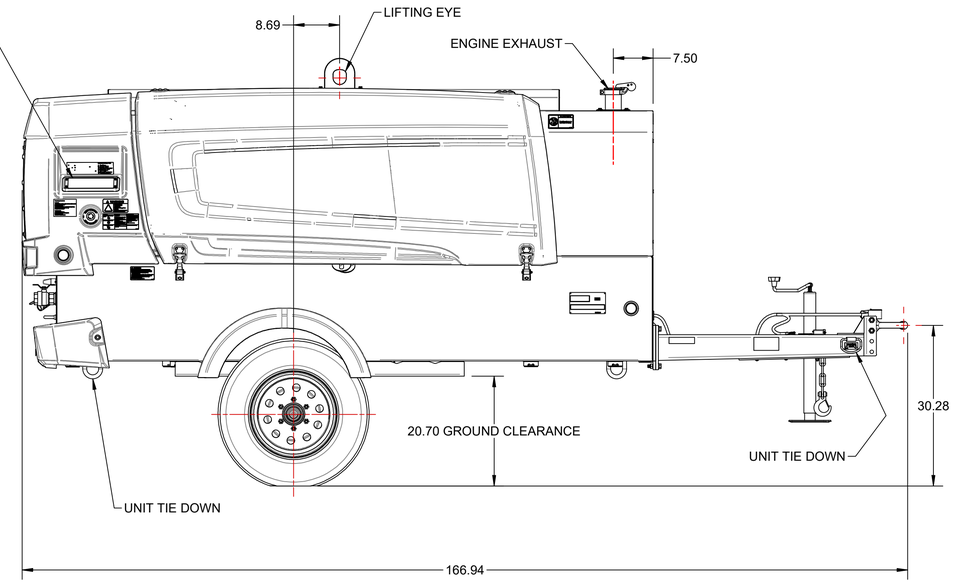

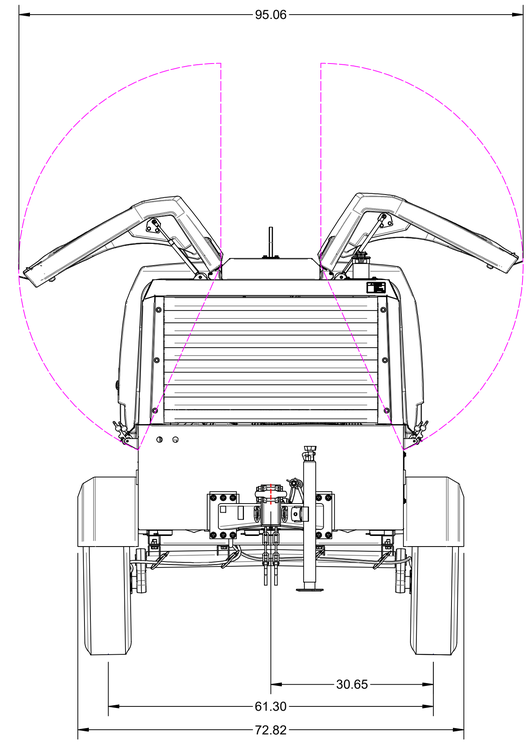

Unit	Dry Weight	Wet Weight
XAS 400-200 PACE John Deere	4,090 lbs.	4,700 lbs.
XAS 400-150 PACE John Deere	4,090 lbs.	4,700 lbs.

ED	DESCRIPTION	DN	DATE	BY

Tolerances, if not indicated, according to:
ATLAS COPCO POWER TECHNIQUE, NORTH AMERICA, LLC
Rock Hill, SC 29730

Paint Spec.	Tolerance	P/N Stamping
1310 9203 85	1310 9000 00	1310 9039 51

This document is our property and shall not without our permission be altered, copied, used for manufacturing, or communication to any other person or company.

GENERAL ARRANGEMENT **SIZE 1**

Secrecy Class 1102 K / 2
Unless specified dimensions are in inches
CAD INV 2020
Owner UVC
Matr'l See Drawing
Scale N/A
Drawn By UVCJC
Weight Lbs.
Date 9/7/2021
DWG Status RELEASED
Replaces
Part Number 1317006001
Sheet 1 of 1
Rev 00
3rd angle proj.